HOGS' Standard

7mm Couplings

Introduction

How do you make your couplings? This is a question that we* often receive at exhibitions.

So what follows is a description of how we have been using the Sprat & Winkle (S & W) coupling for many years on our 7mm layouts. This has developed into a de facto standard for our exhibition and home-based layouts.

We chose to use the 4mm version of the Sprat & Winkle coupling, as it is slightly more discrete than the 7mm model. We use the AC4/3 type, currently available from Model Signal Engineering, part of Wizard Models, and this features the delayed uncoupling operation.

There are many people who have now made these couplings and needless to say we all make them slightly differently. They are however fairly forgiving and, as long as the bar height is correct and the 'offset' is to the correct side, they seem to work together reasonably well, despite the differences in construction. You do have to be careful if you have prominent vac pipes or steam heating pipes hanging off the buffer beam that they do not foul the couplings. We fit locomotives with a coupling bar only, without the hook.

We've used these couplings in 7mm scale for nearly 30 years now. We have used this design on home and exhibition layouts. While we don't claim 100% reliability for the couplings, we reckon we are getting close to 99%. So we can claim that the design is tried and tested under exhibition conditions. What follows is a general description of how some of us construct these couplings; some of us use slight variations but the results are similar.

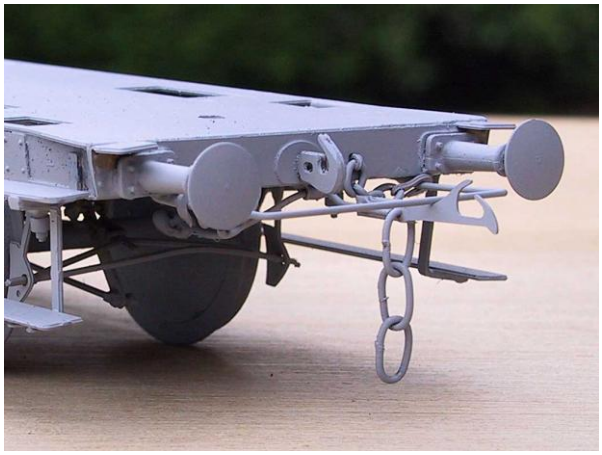

Wizard Models AC4/3 fret

Eileens Emporium

* HOGS: a group of like-minded 7mm modellers, all members of the Gauge O Guild, who between them have produced exhibition layouts including 'Harlyn Road', 'Ellis Road', 'Harlyn Pier' and 'Newhurst'.

Components

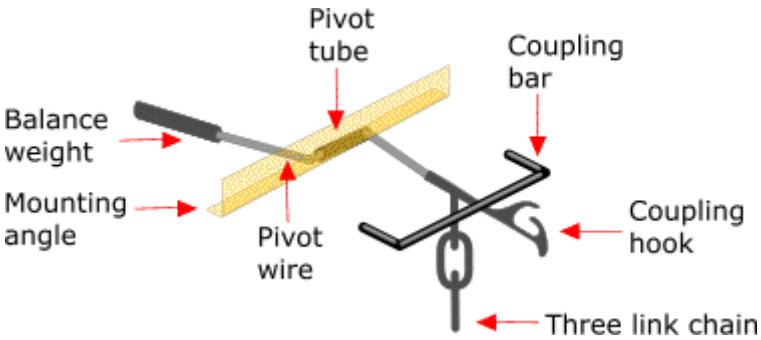

We use a maximum of 0.7mm (often 0.6mm) brass wire for the coupling bar (can be thinner provided it's strong enough), 0.6 mm brass wire for the pivot wire, brass pivot tube to take the pivot wire and brass angle to mount the pivot tube to the vehicle. The 3-link chain is made from soft iron florists' wire and is available from any garden centre. The bottom link should be a steel link to ensure the uncoupling magnet will attract it. One of the links provided in many kits will suffice.

On plastic wagons you can make the coupling up complete on a piece of brass angle and then fix in place with Araldite. Sometimes you have to modify the brass angle, (cut notches in it) or the underframe bracing to fit things nicely. On an etched brass kit you could make the coupling up by soldering the components directly to the brass buffer beam.

Coupling Bar

The S & W instructions suggest a bar across the buffers. We feel that this is too high and unsightly and fitting the bar slightly below the buffer beam has a couple of advantages. You don't need to modify the buffer beam and can retain the original coupling hook. It also gives the option of mounting the coupling on the bogie of a long vehicle. We set the height of the bar to just over 20mm above the railhead by using a Height Gauge – see below. It's important that this height is the same on all vehicles.

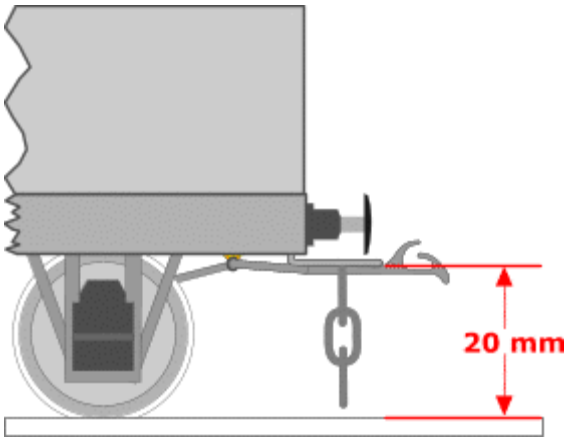

Using 0.6-0.7mm brass wire we make the bar as long as is reasonable between the buffers and the bar should be in line or just 'forward' of the buffer heads; it must not be behind the buffer heads. We have found that a very short bar gives trouble with

the 'opposing' coupling hook fouling the sides of such a short bar on tight curves. We recommend an ideal width of 23mm and a minimum width of 20mm.

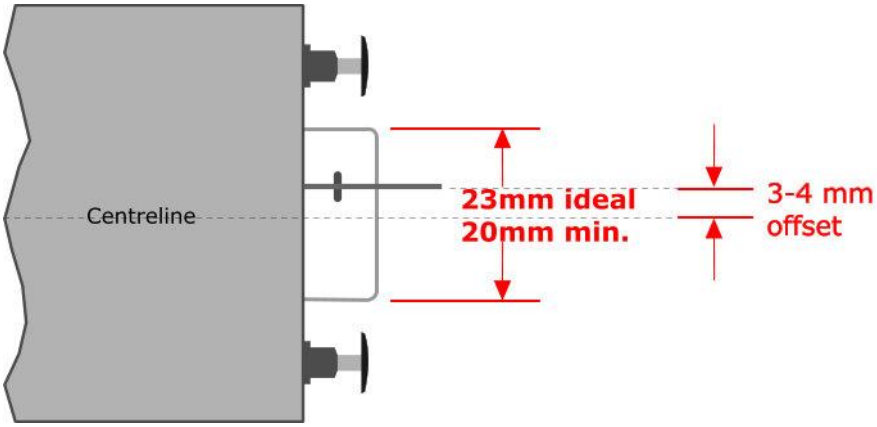

Coupling Hook

Using the hook component from the fret, we cut off the balance weight either across X-X or around Y to get some extra length – see below.

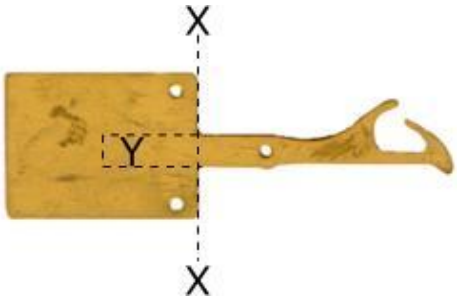

Now it's fairly important that the relationship between the bar and the hook is the same on all vehicles. We do this by getting the narrowest portion of the hook directly under the bar. Offer the hook up to the bar and trim the 'shank' of the hook to give a little bit of clearance on the buffer beam.

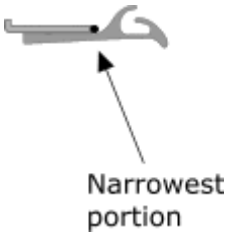

Next, put a right angle bend in a 50mm length of 0.6mm wire and feed the wire through the brass pivot tube such that the bent bit sticks straight out towards the bar. DO NOT MAKE THE SECOND BEND YET. Then offer up the hook, try and hold it in the correct place relative to the bar and trim the end of the wire so that it just clears the hole in the etched hook. Now solder the 0.6mm brass wire to the hook so you should now have…

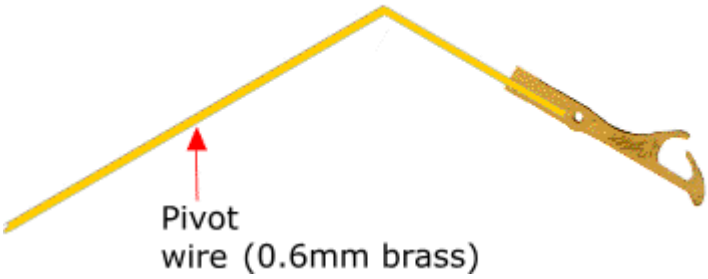

Pivot Tube

Having got the brass bar in place cut a small length of tube (6-8 mm) and solder it centrally to the brass angle to give the required offset from the centre. Our standard if for the hook to be offset to the left, when viewed from the top of the wagon. It is important that you offset ALL your vehicles the same way.

The Chain

You can make your own three link chains from florists' wire - it's surprisingly easy to do. Take a piece of ½ inch brass channel or other suitable material, and cut one end of this away to leave a finger about 1.5 mm by 5.5 mm and about 25 mm long. Take a length of the florists wire; strip off the green plastic covering with a knife and then wind it tightly around the finger like a spring. Then take a razor saw and cut along one side of the 'coil'. Or, snip with side cutters if easier. In a matter of minutes you can make about twenty links - see the attached photo sequence. You should find that the etched hole is large enough to take the top link. You may prefer to solder the top link to the etched hook; this is not essential but helps to prevent the coupling from getting tangled up in transit. Now fit the remaining two links; they only need a bit of 'tweaking' with a pair of small pliers to get the shape correct after fitting. You may also try to run a bit of solder across the joint in each link. The bottom link should be a steel link to ensure the uncoupling magnet will attract it.

Balance Weight

You should now have a bit of wire with a right angle bend, a coupling hook soldered to it and three links of chain hanging from it. Feed the wire back through the pivot tube, check it's all in the right place. Hold the hook tightly against the end of the pivot tube then simply bend the other end of the wire round at a right angle to hold it all together.

Then you will need a balance weight and you could use anything suitable. Some of us just form a loop in the wire and fill it with solder although this can be a bit hit and miss, so it may be preferable to use a piece of brass tube. You may slide the balance weight up or down the wire to get the balance just right, and then solder it in place on the wire. The coupling should pull down easily when over the magnet but return positively when clear of it.

With the coupling completed and fitted it is easy to adjust the bits of wire with a pair of pliers to get the height of the bar right and to get the hook level – see Height Gauge.

Height Gauge

This is done using a piece of 20mm steel or other metal angle with a notch cut in it to clear the coupling hook.

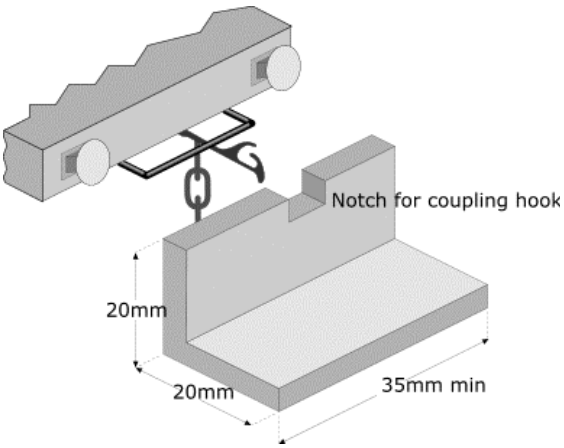

Place the gauge on the track, run the vehicle up to it and 'tweak' the bar with a pair of pliers until it just touches the top of the gauge. We suggest you make up the complete coupling and tackle the height adjustment when it is finally fitted to the vehicle.

Track Magnet

We use the long permanent magnets available from Model Signal Engineering, part of Wizard Models, or Neodymium magnets, also called Rare Earth Magnets. We use C & L or Peco track on most of our layouts, mounted on 3mm cork sheet. We fit the magnets at an angle so that each coupling chain is directly over the magnet. To fit, cut out the centre section of three sleepers, and then cut a trench in the ballast and the cork to just take the magnet. Arrange the top surface of the magnet just below the surface of the adjacent sleepers. Then glue the magnet in place and replace the missing centre sections of the sleepers with strips of 10 thou black plasticard.

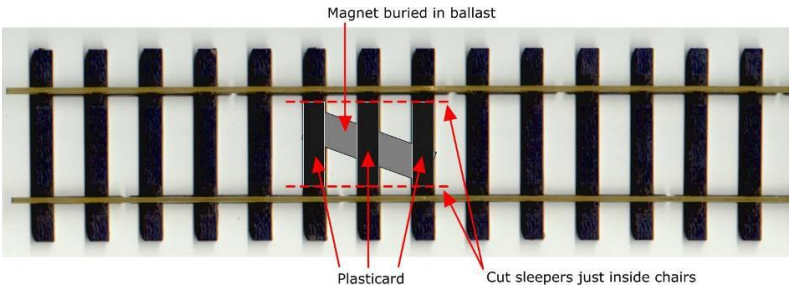

After painting and ballasting the magnets are invisible. This of course can be a problem; luckily most of our club layouts are viewed from the front and operated from the rear. A spot of white paint on the back side of the rail clearly marks the position of the magnet for operators, while being invisible to the public. We have tried using electro-magnets, but on those commercially available the size of the head is not neither long enough, nor powerful enough, to pull down two couplings.

Using Neodymium magnets can be easier as the sleepers can be left intact and 2 holes drilled or cut in the cork sheet/baseboard top. We have found 6mm diameter by 4mm thickness to be powerful enough.

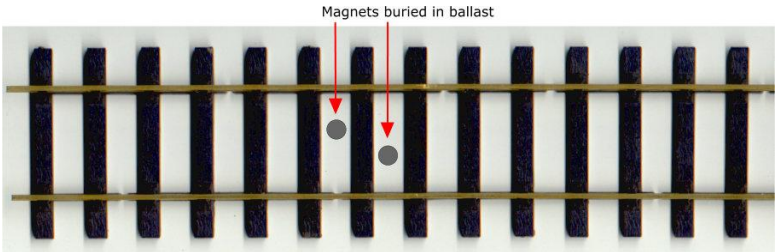

Making the three link chain

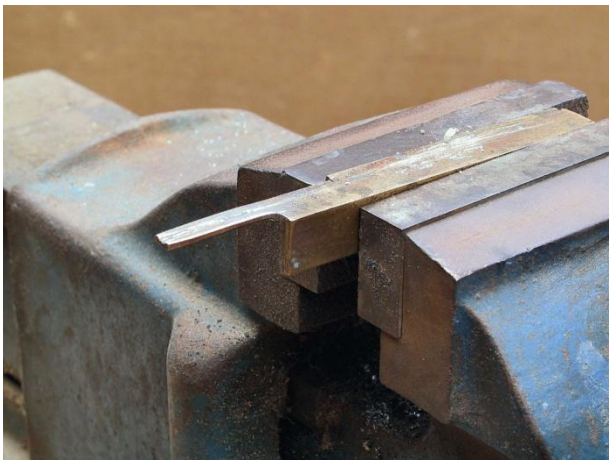

The brass former with...

...the soft iron wire wrapped around it,…

…which is then cut through…

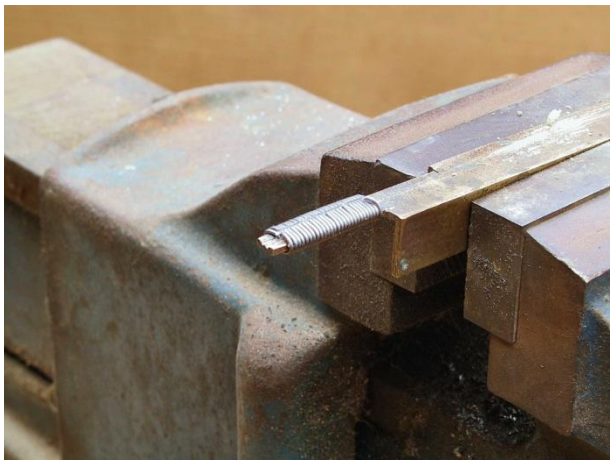

…providing several links…

…like these…

…and these.

Pictures by Dave Cox, Crawley Model Railway Society

Other Thoughts

To get the best from these couplings you need two things, well running controllable locomotives and rolling stock with some resistance, i.e. not too free-running. If the coupling can be kept under tension or compression then it will not uncouple when passing over a permanent magnet. To uncouple you need to stop over a magnet, gently reverse the loco until you see the coupling move, and then pull the loco forward again and the coupling hooks should be attracted to the magnet and the wagons part easily. This is known by some as a "double shuffle". To do this properly and reliably you do need controllable locomotives.

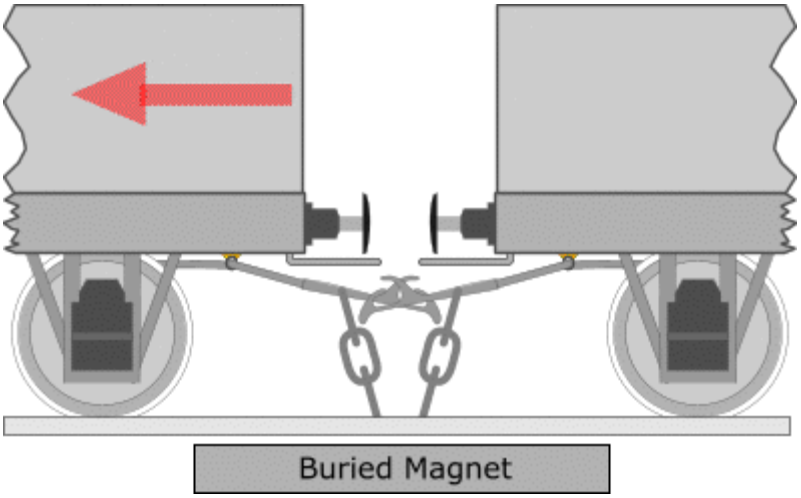

To couple up you need to push the train off the magnet, move the loco forward to allow the coupling to rise and then reverse the loco again to couple up properly.

So what about the rolling stock? Well if you have very free running stock, any slight hesitation of the loco can cause wagons further down the train to 'bounce'. If a 'bounce' occurs when a set of couplings are over a magnet then they will uncouple! This 'bounce' can be exacerbated or even caused by sprung buffers. A similar problem arises when 'pushing back' an already uncoupled wagon; in this case the buffers can easily make contact and sprung buffers can 'bounce' and the wagon can re-couple as a result.

So if you experience this with a wagon with sprung buffers, you may wish to apply a spot of superglue to the shaft and thus make them solid buffers. These problems are exacerbated by the fact that many '0' gauge wagons are very free running, and it's not that easy to pin the brakes down. One approach is to fix one end of a length of springy wire to the underside of the wagon and arrange the other end to bear on one axle. The added friction can help prevent this bounce behaviour.

Neodymium magnets can be obtained from Guys Magnets.

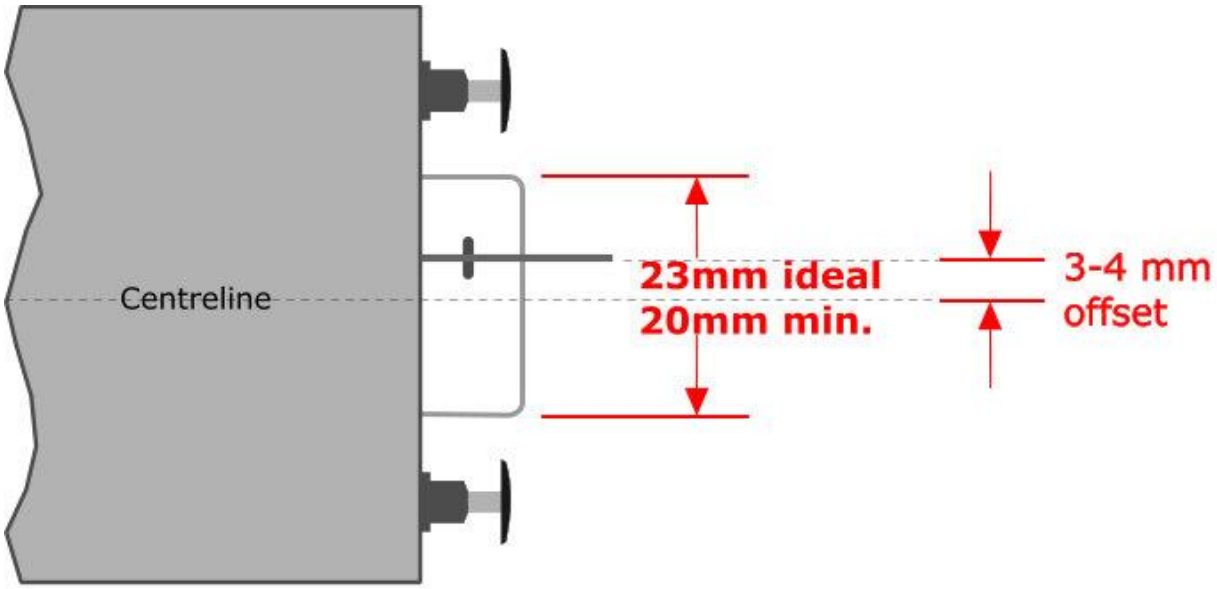

Diagram 1 - Plan View (from above)

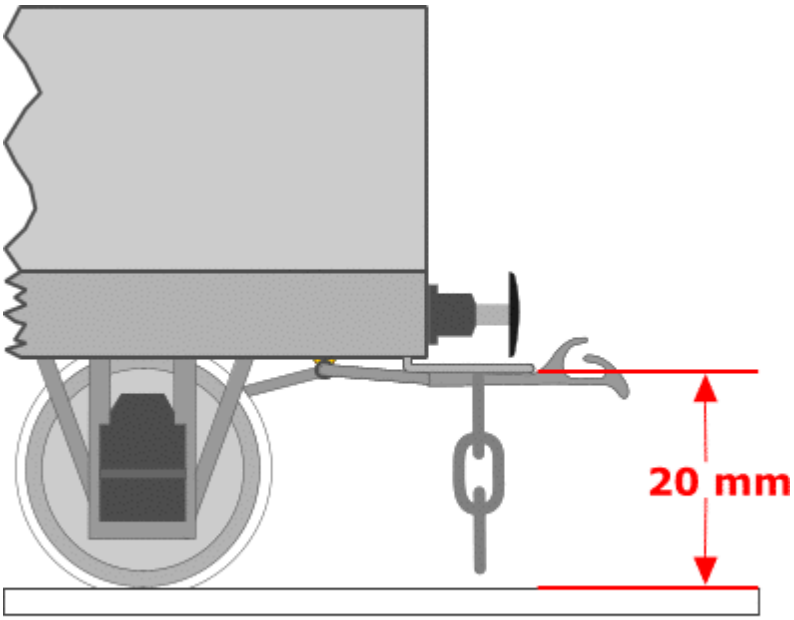

Diagram 2 - Side View

All pictures and diagrams by Rob Cottrell (GOG 14193) unless shown otherwise.